REV	ECN.NO.	REVISIONS	REV.DRAWN	DATE
C			YU	06-03/09
D		更改孔位尺寸	YU	07-02/06
E		增加无卤料料号说明	Yuqilong	2008/11/03
F		**1.45**改成**1.37**	hejihuai	2009/02/24

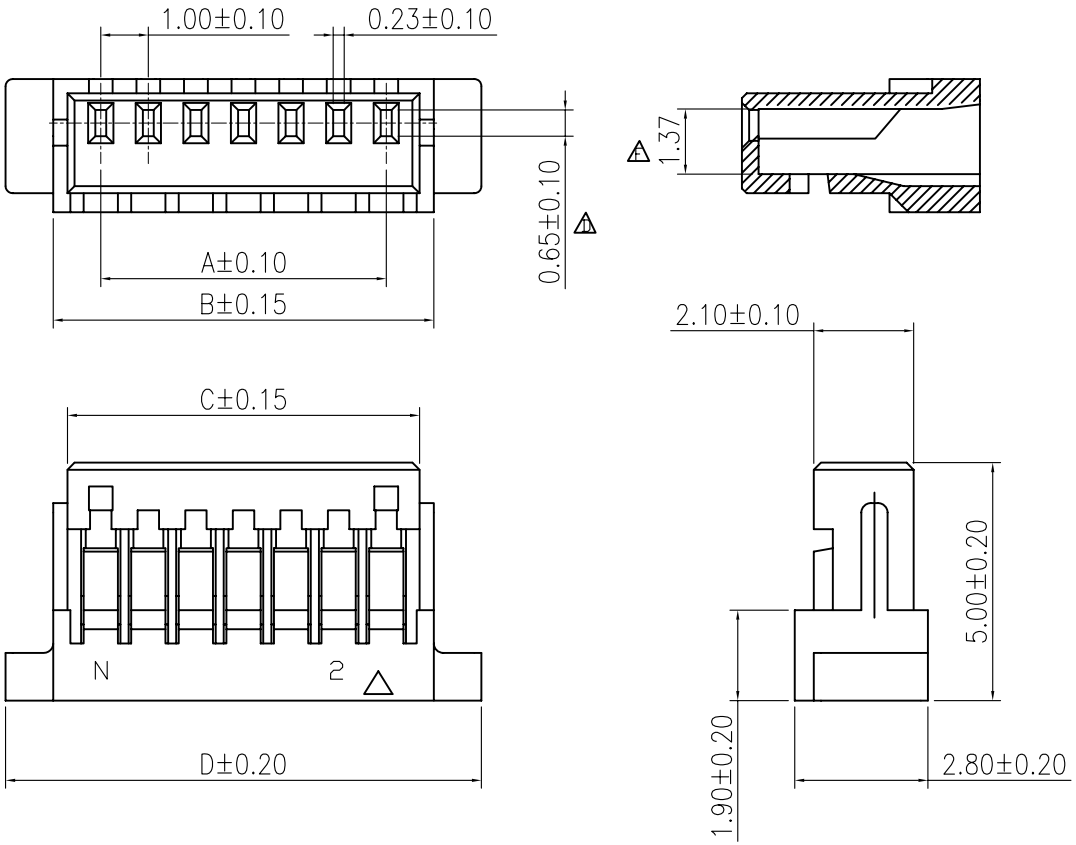

SPECIFICATIONS
- Rated Voltage : 50V AC/DC
- Rated Current : 1A AC/DC
- Withstanding Voltage : 500V AC/minute
- Insulation Resistance ; 100MΩ min
- Temperature Range : −25°C to +85°C
- Contact Resistance : 20mΩ max

HOUSING
- Part No Legend : JS−1253−XX−XXXX−XX
  - Poles: 2~20
  - Blank&D0: PA66
  - (Color) Blank: Nature
  - Bk: Black
  - NH: Halogen Free
  - Blank: Normal
- Material: PA66 UL 94V−0
- Q'ty : 1,000 pcs/Bag

POLES	PART NO.	DIMENSIONS			
	JS−1253−XX	A	B	C	D
2	JS−1253−02	1.00	3.00	2.40	5.00
3	JS−1253−03	2.00	4.00	3.40	6.00
4	JS−1253−04	3.00	5.00	4.40	7.00
5	JS−1253−05	4.00	6.00	5.40	8.00
6	JS−1253−06	5.00	7.00	6.40	9.00
7	JS−1253−07	6.00	8.00	7.40	10.00
8	JS−1253−08	7.00	9.00	8.40	11.00
9	JS−1253−09	8.00	10.00	9.40	12.00
10	JS−1253−10	9.00	11.00	10.40	13.00
11	JS−1253−11	10.00	12.00	11.40	14.00
12	JS−1253−12	11.00	13.00	12.40	15.00
13	JS−1253−13	12.00	14.00	13.40	16.00
14	JS−1253−14	13.00	15.00	14.40	17.00
15	JS−1253−15	14.00	16.00	15.40	18.00
16	JS−1253−16	15.00	17.00	16.40	19.00
17	JS−1253−17	16.00	18.00	17.40	20.00
18	JS−1253−18	17.00	19.00	18.40	21.00
19	JS−1253−19	18.00	20.00	19.40	22.00
20	JS−1253−20	19.00	21.00	20.40	23.00

X.± 0.50	X.°± 3.0°	UNITS mm	NAME(INTENDED USE) CUSTOMER
.X± 0.30	.X°± 2.0°	MAT'L	PART NO.(INTENDED USE) JS−1253−XX XX−NH
.XX± 0.20	.XX°± 1.0°	FINISH	APPD:
.XXX± 0.10	.XXX°± 0.5°	Q'TY	CHKD: XUWEI 2009/02/24
			DR: Yuqilong 2008/11/03

THESE DRAWINGS AND SPECIFICATIONS ARE THE PROPERTY OF CHYAO SHIUNN ELECTRONIC CO., LTD. AND SHALL NOT BE REPRODUCED. COPIED OR USED IN ANY MANNER WITHOUT THE PRIOR WRITTEN CONSENT OF CHYAO SHIUNN ELECTRONIC CO., LTD.

CHYAO SHIUNN ELECTRONIC (SHANGHAI) CO.,LTD.

TITLE: 1.00mm Crimp Style Connector

DWG NO.: 020−0042−1253−XX

SCALE	SHEET	REV.
2:1	1/1	F

符合环境管理物质

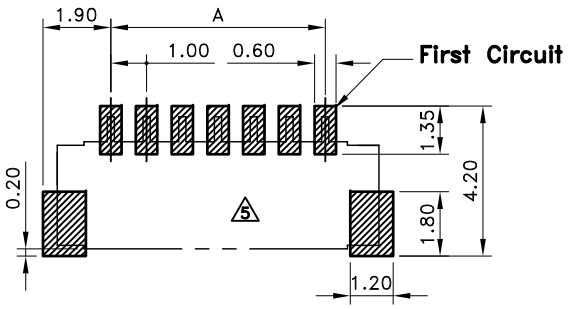

RECOMMEND PCB LAYOUT

General tolerance±0.05

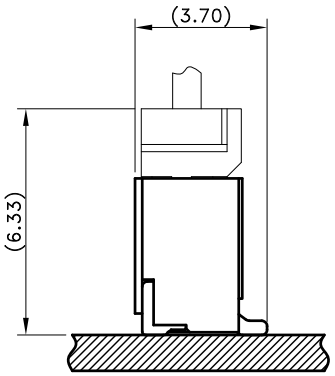

ASSEMBLED ALL PART VIEW

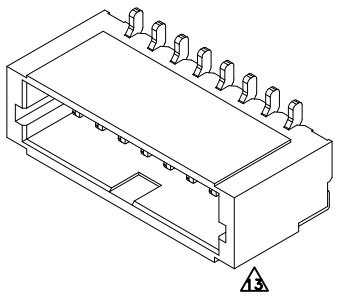

3D VIEW

■ **SPECIFICATIONS**

14
- Current Voltage : 50V AC/DC
- Current Rating : 1 A AC/DC
- Withstanding Voltage : 500V AC/minute
- Insulation Resistance : 100MΩ min
- Temperature Range : - 25℃ to + 85℃
- Contact Resistance : 20mΩ max

■ **WAFER (SMT Type)**

- Part No. : JS-1254-XX (XX)-XX-XX
  ① ② ③ ④

Code No :

1 ① Poles : 02~22

② Plated :
Blank : Tin Plated
16 G&G0 : Gold Plated 4
NM : Matte-Tin Plated 7

③ Base Color :
Blank : Nature
BK : Black

17 ④ Base Material :
Blank : Nylon 9T UL94V-0
L5 : LCP UL94V-0(Halogen Free) 10
16 12 NH : Nylon 6T/66 UL94V-0(Halogen Free)

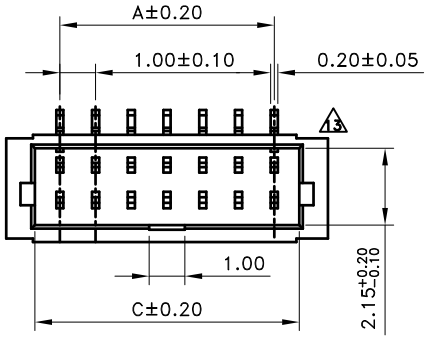

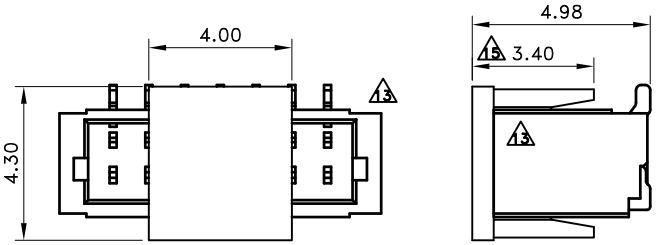

ASSEMBLED CAP VIEW 3

- Material :
  1. Contact : Phos. Bronze
  2. Solder Tab : Brass
  3. Base : Refer the above options
- Q' ty : 1,000 pcs./Tube
- Q' ty : 1,000 pcs./Reel /With Cap
  ※ Note : Cap Stopper for Fixed Position

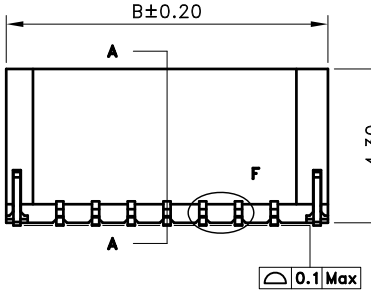

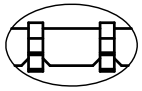

DETAIL F (SCALE 2:1)

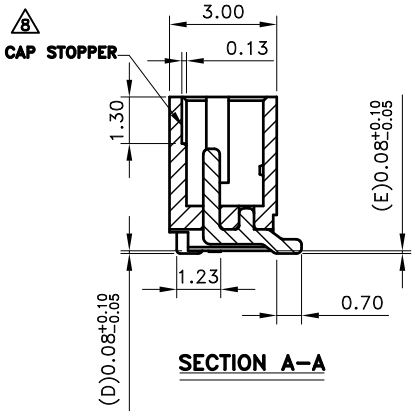

SECTION A–A

6

Poles	Dimensions (mm)			Poles	Dimensions (mm)		
	A	B	C		A	B	C
2	1.00	4.00	2.45	13	12.00	15.00	13.45
3	2.00	5.00	3.45	14	13.00	16.00	14.45
4	3.00	6.00	4.45	15	14.00	17.00	15.45
5	4.00	7.00	5.45	16	15.00	18.00	16.45
6	5.00	8.00	6.45	17	16.00	19.00	17.45
7	6.00	9.00	7.45	18	17.00	20.00	18.45
8	7.00	10.00	8.45	19	18.00	21.00	19.45
9	8.00	11.00	9.45	20	19.00	22.00	20.45
10	9.00	12.00	10.45	21	20.00	23.00	21.45
11	10.00	13.00	11.45	22	21.00	24.00	22.45
12	11.00	14.00	12.45				

喬訊電子工業股份有限公司
CHYAO SHIUNN
ELECTRONIC INDUSTRIAL LTD.

APPROVED BY	SCALE	UNIT
張育瑞		mm
CHECKED BY	PROJ	VER NO.
周家慶		a17
DRAWN BY	DATE	SIZE
鄭小嬌	2015/10/26	A4

TOLERANCE		LTR	REVISION RECORD	NAME	DATE
.0	±0.30	8	新增CAP STOPPER位置說明	黃科源	2009/05/07
.00	±0.20	9	新增無鹵選項並合併圖面	金 飛	2010/11/01
.000	±0.10	10	新增LCP材料	王誠賢	2012/05/29
ANGLE		11	新增NH選項及修改原NH為HF	林謙豪	2012/06/07
0°	±1°	12	修正編碼選項	吳弘文	2013/02/25
.0°	±	13	修改接地片位置	黃廣珍	2013/04/19
SHEET	1/1	14	增列額定電壓	吳弘文	2013/08/08

LTR	REVISION RECORD	NAME	DATE
15	增CAP尺寸標示	吳弘文	2013/12/06
16	增加電鍍規格G0及修改NH用料	黃廣珍	2014/03/04
17	無鹵代碼"HF"刪除,與NH重複	鄭小嬌	2015/10/26

CUSTOMER

Conforms to The RoHS Instruction

PART NO JS-1254-XX(XX)-XX-XX

1.00mm WIRE TO BOARD CONNECTOR, SMT & STRAIGHT

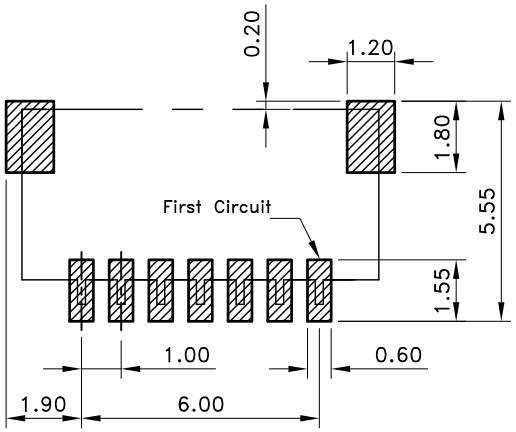

Recommended PCB Layout
General tolerance±0.05

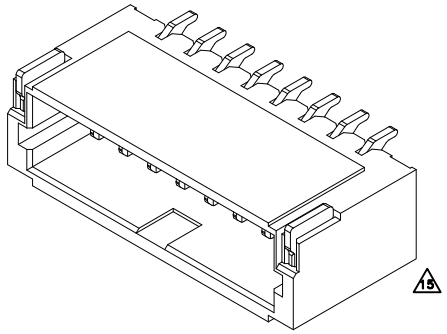

3D VIEW

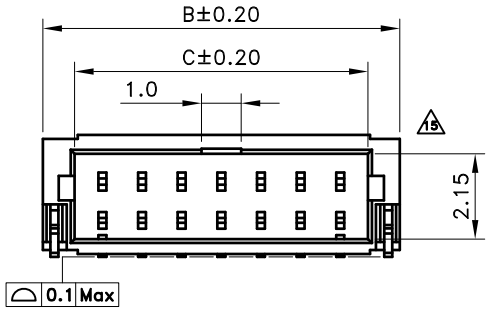

CAP STOPPER

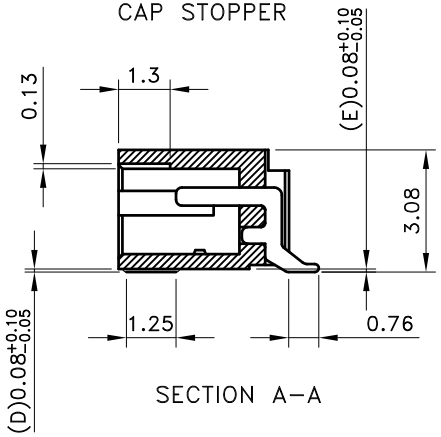

SECTION A–A

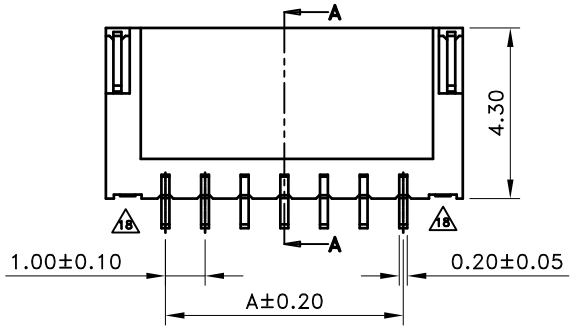

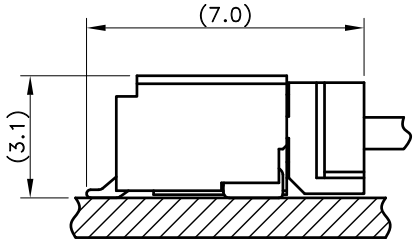

ASSEMBLED VIEW

■ SPECIFICATIONS

16
- Voltage Rating : 50 AC/DC
- Current Rating : 1 A AC/DC
- Withstanding Voltage : 500V AC/minute
- Insulation Resistance : 100MΩ min
- Temperature Range : - 25℃ to + 85℃
- Contact Resistance : 20mΩ max

■ WAFER

10

- Part No. : JS-1254R-XX (XX)-XX-XX
  ① ② ③ ④

Code No :

① Poles : 02~22

② Plated :
Blank : Tin Plated
17 G&G0 : Gold Plated
NM : Matte-Tin Plated

③ Base Color :
Blank : Nature
BK : Black

19 ④ Base Material :
Blank : Nylon 9T UL94V-0
L5 : LCP UL94V-0(Halogen Free) 12
17 14 NH : Nylon 6T/66 UL94V-0(Halogen Free)

- Material :
  1. Contact : Phos. Bronze
  2. Solder Tab : Brass
  3. Base : Refer the above options
- Q' ty : 1,000 pcs./Tube
- Q' ty : 1,000 pcs./Reel /With Cap
  ※ Note : Cap Stopper for Fixed Position

Poles	Dimensions (mm)			Poles	Dimensions (mm)		
	A	B	C		A	B	C
2	1.00	4.00	2.45	13	12.00	15.00	13.45
3	2.00	5.00	3.45	14	13.00	16.00	14.45
4	3.00	6.00	4.45	15	14.00	17.00	15.45
5	4.00	7.00	5.45	16	15.00	18.00	16.45
6	5.00	8.00	6.45	17	16.00	19.00	17.45
7	6.00	9.00	7.45	18	17.00	20.00	18.45
8	7.00	10.00	8.45	19	18.00	21.00	19.45
9	8.00	11.00	9.45	20	19.00	22.00	20.45
10	9.00	12.00	10.45	21	20.00	23.00	21.45
11	10.00	13.00	11.45	22	21.00	24.00	22.45
12	11.00	14.00	12.45				

喬訊電子工業股份有限公司
CHYAO SHIUNN
ELECTRONIC INDUSTRIAL LTD.

PART NO JS-1254R-XX(XX)-XX-XX

1.00mm WIRE TO BOARD CONNECTOR, SMT & Right Angle

APPROVED BY	SCALE	UNIT
張育瑞		mm
CHECKED BY	PROJ	VER NO.
周家慶		a19
DRAWN BY	DATE	SIZE
鄭小嬌	2015/10/26	A4

TOLERANCE		LTR	REVISION RECORD	NAME	DATE
.0	±0.30	10	增加無鹵材料；合併圖面	金 飛	2010/11/01
.00	±0.20	11	刪減多餘尺寸	周美麗	2011/10/20
.000	±0.10	12	新增LCP材質	王誠賢	2012/05/29
ANGLE		13	新增NH選項及修改原NH選項為HF	林謙豪	2012/06/07
0°	±1°	14	修正編碼選項	吳弘文	2013/02/25
.0°	±	15	修改接地片位置	黃廣珍	2013/04/19
SHEET	1/1	16	增列額定電壓	吳弘文	2013/08/08

LTR	REVISION RECORD	NAME	DATE
17	增加電鍍規格G0及修改NH用料	黃廣珍	2014/03/04
18	外觀修正增加模號與穴位缺口	吳弘文	2014/11/17
19	無鹵代碼"HF"刪除，與NH重複	鄭小嬌	2015/10/26

CUSTOMER

Conforms to The RoHS Instruction

A4

REV.	ECN NO.	REVISIONS	REV.DRAWN	DATE
F	09151	修改电镀规格	Asimo	2009/08/03
G	----	修改SPECIFICATIONS	Asimo	2009/10/19
H	----	增加G4电镀规格	Asimo	2010/03/23
I	----	依客户要求，增加开口尺寸	Sunquan	2010/05/28
J	11041	依客户要求，修改卡钩高度及形状	Asimo	2011/12/27

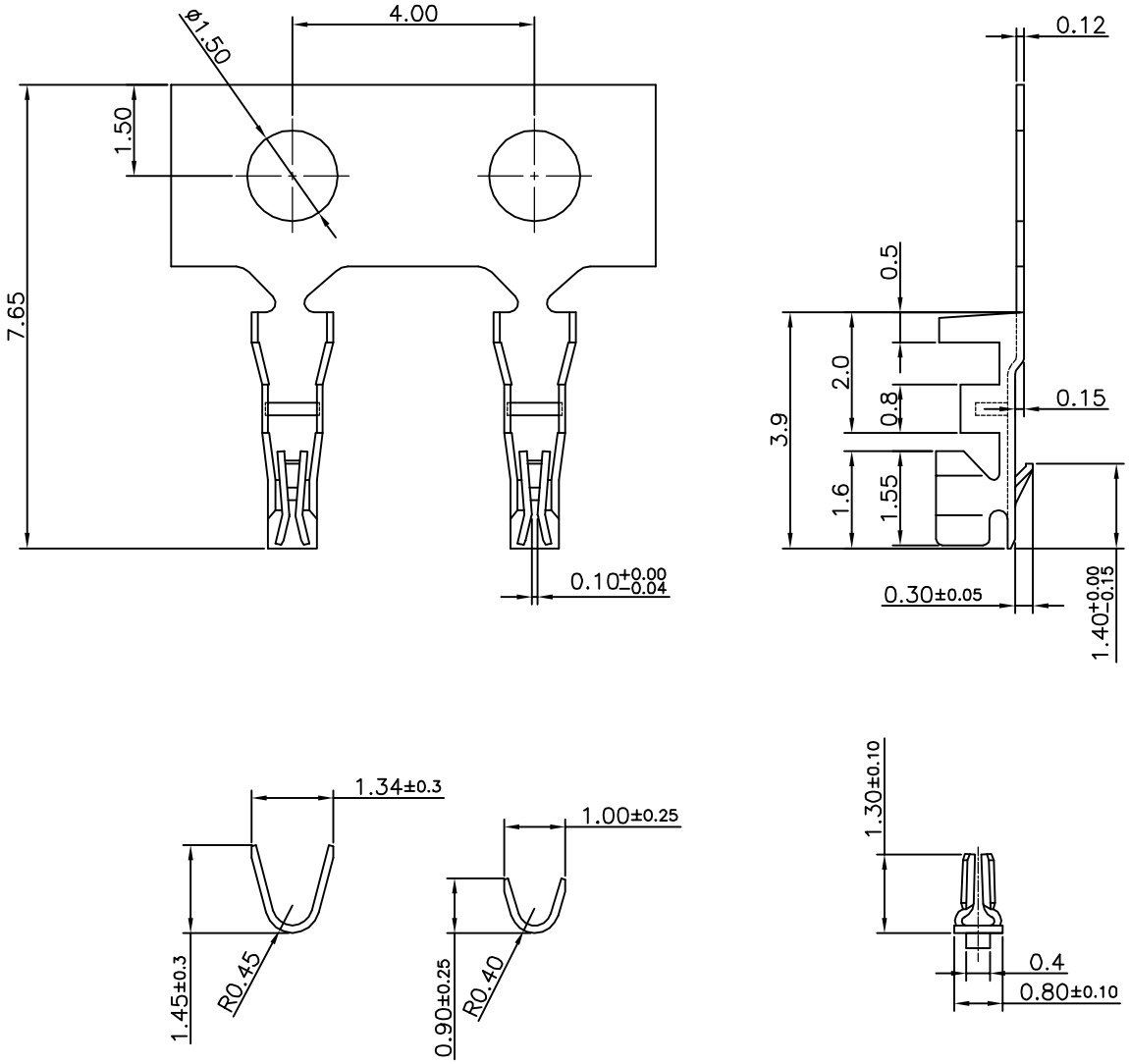

SPECIFICATIONS:

- VOLTAGE RATING: 50V AC/DC
- CURRENT RATING: 1A, AC/DC
- WITHSTANDING VOLTAGE: 500V AC/DC
- INSULATION RESISTANCE: 100MΩ Min.
- TEMPERATURE RANGE: −25°C~+85°C
- CONTACT RESISTANCE: INITIAL VALUE: 20mΩ Max.
  AFTER ENVIRONMENTAL TESTING: 40mΩ Max.

NOTES:

1. MATERIAL: PHOS.BRONZE(C5210−SH T=0.12)
2. Q'TY: 15,000 PCS/REEL
3. APPLICABLE WIRES: AWG#32~28
4. PART No.

JS−1253−TXX

- 0: NO PLATING
- 先镀后冲 BLANK: Sn>50μ" Ni>10μ"
- TIN PLATED 2: Sn>100μ" Ni>30μ"
- 4: Sn>50μ" Ni>10μ"
- GOLD PLATED G0: Au>0.8μ" Ni>30μ"
- G1: Au>3.0μ" Ni>30μ"

X. ± 0.40	X.° ± 5.0°	UNITS: mm	NAME(INTENDED USE): CUSTOMER
.X ± 0.30	.X° ± 2.0°	MATERIAL: SEE NOTE	PART NO.(INTENDED USE): JS−1253−T
.XX ± 0.20	.XX° ± 1.0°	FINISH: SEE NOTE	APPD:
.XXX± 0.10	.XXX°± −−	Q'TY: SEE NOTE	CHKD:
			DR: Asimo 2010/03/23

THESE DRAWINGS AND SPECIFICATIONS ARE THE PROPERTY OF CHYAO SHIUNN ELECTRONIC CO., LTD. AND SHALL NOT BE REPRODUCED, COPIED OR USED IN ANY MANNER WITHOUT THE PRIOR WRITTEN CONSENT OF CHYAO SHIUNN ELECTRONIC CO., LTD.

符合环境管理物质

CHYAO SHIUNN ELECTRONIC (SHANGHAI) CO.,LTD.

TITLE: 1.00mm Crimp Style Connector

DWG NO.: 010−0015−1253−T

SCALE	SHEET	REV.
8:1	1/1	J